Pack n Tec

STANDARD EQUIPMENT CATALOG

ROBOTIC PALLETIZER

ULTRASONIC CLEANING

WEIGH FILLING MACHINE

HEAT SLEEVE SHRINK

3951 Development Dr., STE 5
Sacramento, CA 95838
Toll Free: 888-232-8566
Email: info@packntec.com
Website: www.packntec.com

Pack n Tec

OUR VALUE PROPOSITION

- COST SAVINGS: Significant Cost Savings Validation.
- PRODUCTION LEAD TIME: 60 Day Delivery of non-custom equipment.
- INSTALLATION AND COMMISSIONING: included in our pricing.
- QUALITY: is equal or superior to all equipment manufacturers in the market place.
- SERVICE: On Call 24/7 technical support and maintenance personnel.
- PARTS AND COMPONENTS: All our major components, control systems, software and robotic parts are from United States, Germany, Japanese, Canadian or European manufacturers.
- CUSTOMER BASE: References provided of installed base of our equipment with customers throughout the Western United States.

Pack n Tec

----------EQUIPMENT---------

ROBOTICS.....4
ULTRASONIC CLEANING TANK.....5
ROBOTIC ARM FOR CASE PACKER.....6
VERTICAL CONVEYOR.....7
MULTI-HEAD WEIGHING SYSTEM.....8
CARTON FLOW PACKING.....9
METAL DETECTOR & CHECK WEIGHER.....10
COFFEE BAGGER AND WEIGHING.....11
CONVEYOR AND FEEDER SYSTEM 12
FOODSERVICE EQUIPMENT.....13
MULTI-BAG VERTICAL LOADER.....14
MULTI-HEAD FILLING SYSTEM.....15
NET BAGGING SYSTEM.....16
PALLET WRAPPING SYSTEM.....17
LABEL APPLICATOR.....18
SACHET/STICK WRAPPER.....19
VERTICAL BUCKET ELVETOR.....20
ROTARY & VFFS BAGGER.....21
BOV INSERTER & FILLING SYSTEM.....22
DEPALLETIZER SYSTEM.....23

info@packntec.com www.packntec.com (916) 900-8241

Pack n Tec

2019 MANUFACTURED AND INSTALLED AT FRESNO RAISIN GROWER

3951 Development Dr.,STE5,
Sacramento, CA 95838
Email: info@packntec.com
Website: www.packntec.com
Toll Free: (888) 232-8566

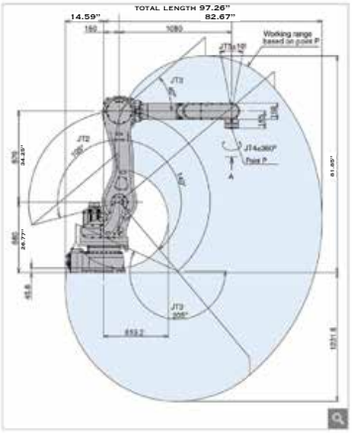

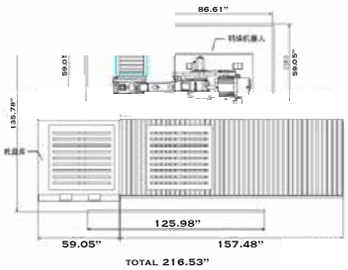

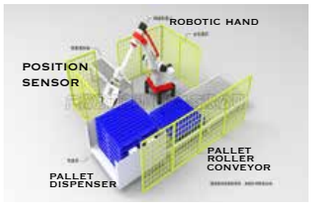

ROBOTIC PALLETIZER

SPEED: 15-20 CARTONS/MIN

EQUIPPED WITH OPTIMAL GRIPPERS

PALLET DISPENSER

ROLLER CONVEYOR 18.74" L

SAFETY CAGE

POWER: 220V/3P/60HZ OR 480V/3P/60HZ

FOOT PRINT: 97.26"x97.26"

RADIUS: 106.14"

MAX PALLET HEIGHT: 98.42"

MAX PICKUP LOAD: 352LBS

CANTILEVER ROBOTIC ARM:

SWITZERLAND ABB

GERMAN KUKA

JAPAN KAWASAKI

ABB KUKA Kawasaki

3951 Development Dr.,STE5,
Sacramento, CA 95838
Email: info@packntec.com
Website: www.packntec.com
Toll Free: (888) 232-8566

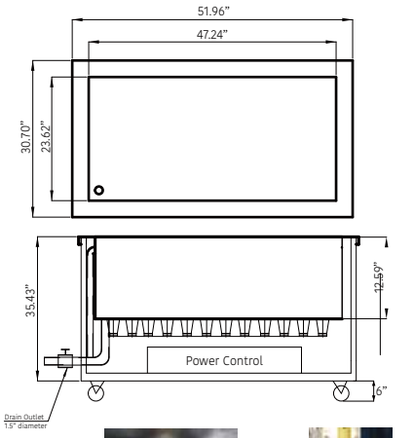

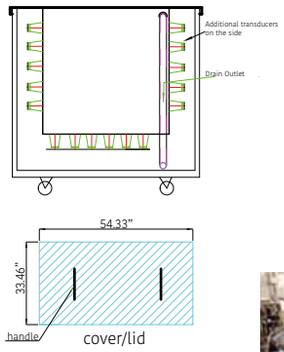

- MATERIAL: STAINLESS STEEL 14 GAUGE
- ULTRASOUND FREQUENCY: 23KHZ
- ULTRASONIC TRANSDUCER: 40-90 PCS OR CUSTOM
- VOLTAGE: 2.0-9.0KW AND ADJUSTABLE
- HEATED TANK UP TO 176 F
- VOLUME: 158 GALLON
- PRESSURE WASH SAFE
- DRAIN OUTLET WITH FILTER TO CLEAN
- DRAIN TAKES 6 MINUTES
- FOOT LEVEL MOUNT ROLLER
- POWER: 220V/3PHASE, 4WIRES/60HZ
- APPLICATION: JERKY RACKS, TEFLON SCREEN, MILLING EXTRUDERS, PRODUCE, BAKERY

milling extruded parts picture

installed tank picture

inner basket picture

installed tank picture

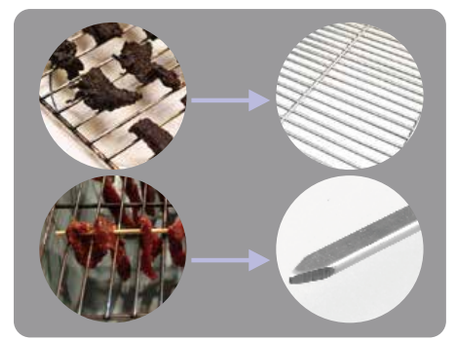

3951 Development Dr.,STE5,
Sacramento, CA 95838
Email: info@packntec.com
Website: www.packntec.com
Toll Free: (888) 232-8566

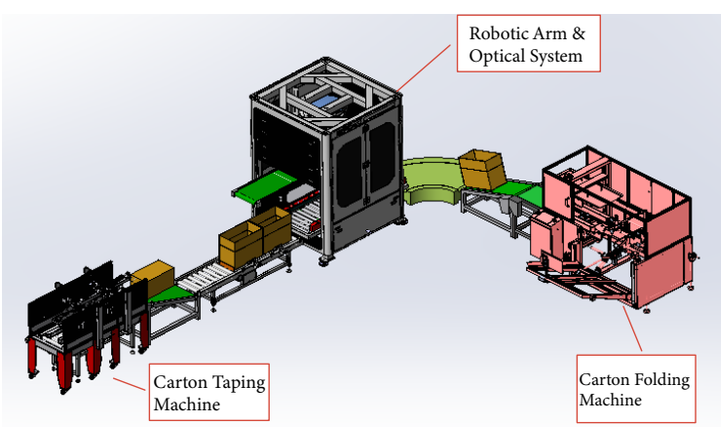

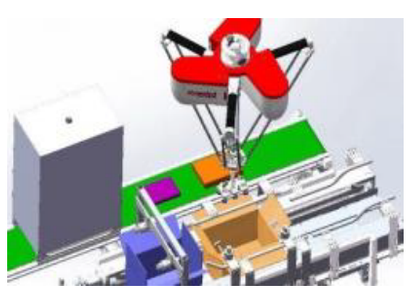

Case Packer for multi-bag size and food variety
Custom design robotic arm & optical system
High speed: 80-130 bags/minute
Optional grip or suction design
Integaration with any bagger or wrapper

Model	PNT4-500
Rated working range	Ø500x155mm
Payload	5kg
Pick and place actions	Max.400P/Min
Position repeatability X,Y,Z	±0.1mm
Angula repeatability	±0.1
Kinematic structure	delta type
Degrees of freedom	3+1
Protection	IP65
Noise level	<65dB(A)
Weight	25kg

3951 Development Dr.,STE5,
Sacramento, CA 95838
Email: info@packntec.com
Website: www.packntec.com
Toll Free: (888) 232-8566

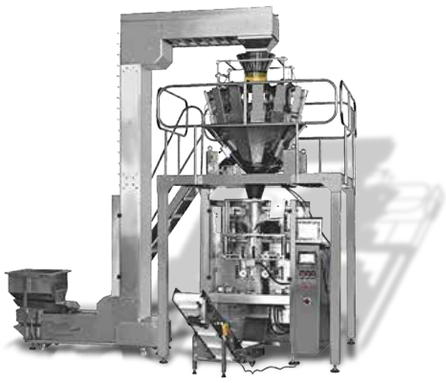

Material: stainless steel us304
Encased stainless steel motor
Food grade pp bucket or Stainless bucket
Stainless steel drive chain
Easy integration with weighing system
Pressure wash safe
Custom height
Adjustable vibration speed
Power: 220v/3phase, 3wires or
fit your requirement

Pack n Tec

multi-head weighing system

3951 Development Dr.,STE5,
Sacramento, CA 95838
Email: info@packntec.com
Website: www.packntec.com
Toll Free: (888) 232-8566

multi-head weighing system

Material: stainless steel
Combination scale
Dimple or plain pattern available
Multi-head rotory/linear/belt scale option
Application in all variety of food/produce
Easy integration with bagger and conveyor
Easy assembly and clean
Muti-head linear option
Power: 220v/3phase, 3wires or
fit your requirement

Pack n Tec

Fresno Raisins Grower Proposal
Carton Flow Equipment

3951 Development Dr.,STE5,
Sacramento, CA 95838
Email: info@packntec.com
Website: www.packntec.com
Toll Free: (888) 232-8566

Carton erector
speed: 8-10 cartons/min
bottom taping: 2-3"wide
no tape alarm
painted steel frame
stainless steel inside
50 flat cartons stack
power: 220v/single phase/
3wires/60hz

Carton liner inserter
speed: 6-8 cartons/min
painted steel frame
stainless steel inside
m type liner bag in roll
power: 220v/single phase/
3wires/60hz

Carton liner heat-sealer
speed: 4 cartons/min
painted steel frame
stainless steel inside
power: 220v/single phase/
3wires/60hz

Robotic palletizer
speed: 15-20 cartons/min
painted steel
pallet dispenser
roller conveyor 18.74" l
safety cage
power: 220v/three phase/
3wires/60hz
including pallet dispenser/roller
conveyor(3 pallets long)

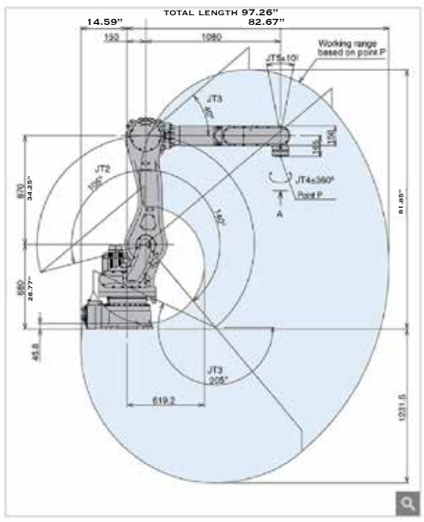

L78.74"
w76.77"
H59.05"

L70.86"
w55.11"
H71.65"

L78.74"
w62.99"
H72.83"

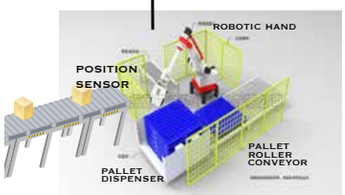

foot print: 97.26"x97.26"
radius: 106.14"
max pallet height: 98.42"
max pickup load: 352lbs

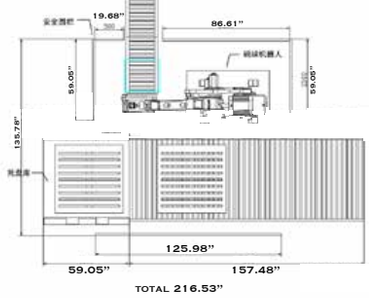

Pack n Tec

METAL DETECTOR & CHECK WEIGHER
2019 MANUFACTURED AND INSTALLED AT
BAKERSFIELD ASIAN VEGETABLE GROWER

3951 Development Dr.,STE5,
Sacramento, CA 95838
Email: info@packntec.com
Website: www.packntec.com
Toll Free: (888) 232-8566

COMBINED METAL DETECTOR & CHECK WEIGHER

MATERIAL: STAINLESS STEEL
METAL DETECTOR: ≥Φ0.8MM
CHECK WEIGHER: +1.5GRAM
AIR OR PUSH REJECTOR
MODBUS RTU CONNECTION FOR REALTIME DATA
POWER: 220V/3P/60HZ OR 480V/3P/60HZ

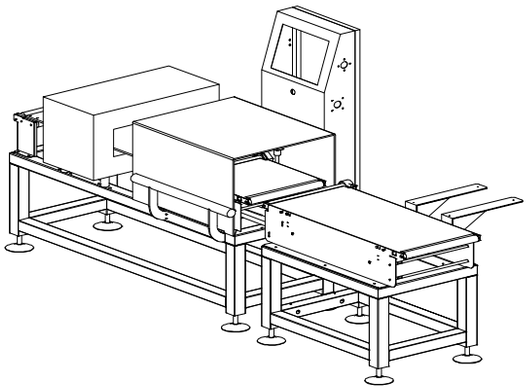

Pack n Tec

2019 MANUFACTURED AND INSTALLED
AT SACRAMENTO COFFEE ROASTING COMPANY

3951 Development Dr.,STE5,
Sacramento, CA 95838
Email: info@packntec.com
Website: www.packntec.com
Toll Free: (888) 232-8566

COFFEE BAGGER & WEIGHING SOLUTION

MATERIAL: STAINLESS STEEL
SINGLE HEAD LINEAR WEIGHING 3.0 LITER
SINGLE STATION BAGGER
SPEED: 15 BAGS/MINUTE
POWER: 220V/3P/60HZ OR 480V/3P/60HZ
OPTIONAL: DATE CODING
BUCKET ELEVATOR CONVEYOR
OUTFEED CONVEYOR
LAZY SUSAN ROTARY TABLE
BLENDER WITH HEAT

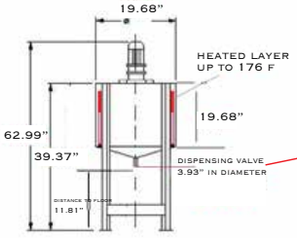

Conveyor & Feeder System

3951 Development Dr.,STE5,
Sacramento, CA 95838
Email: info@packntec.com
Website: www.packntec.com
Toll Free: (888) 232-8566

- Material: stainless steel
- Custom size to fit any application
- Stainless steel encased motor
- Power wash safe
- Bypass safety cover or fence
- Custom feeder design
- Integrated with other scale or sensor or feeders
- Power: 220v/3p/60hz

Foodservice Equipment

3951 Development Dr.,STE5,
Sacramento, CA 95838
Email: info@packntec.com
Website: www.packntec.com
Toll Free: (888) 232-8566

Dimension for mesh bucket is 1.64 ft in diameter

- Material: stainless steel
- Pressure wash safe
- Power: 220v/3phase, 3wires or fit your requirement

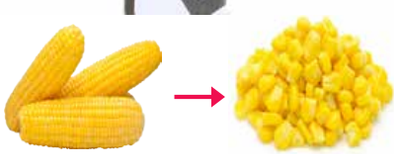

Multi-bag vertical loader (super sack) super sack unloader

3951 Development Dr.,STE5,
Sacramento, CA 95838
Email: info@packntec.com
Website: www.packntec.com
Toll Free: (888) 232-8566

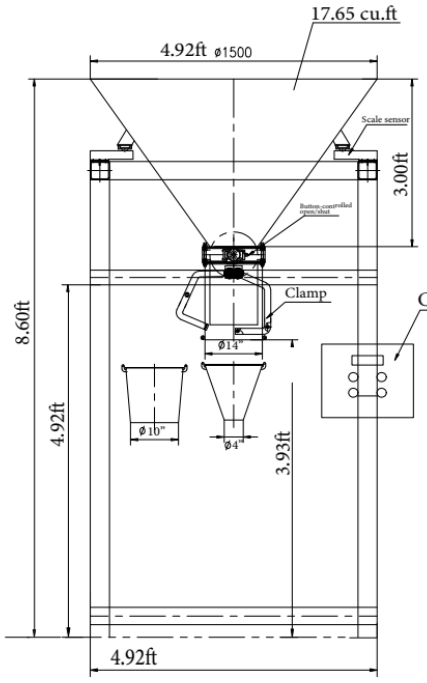

Front View

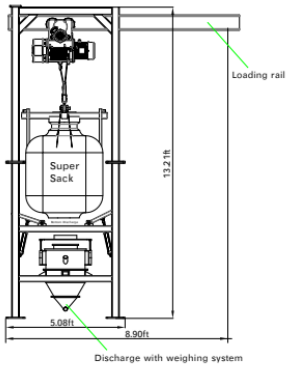

Top View

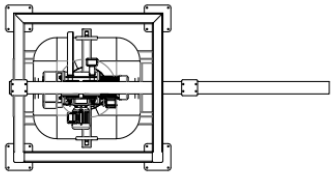

Material: painted carton steel
Weighing range: 33 lbs -- 2204 lbs
Weighing variance: +/- 1%
Air required: 0.5mpa=72.51psi
Manual control
Easy interchange from super sack to small bags
Power: 220/3phase/60hz, 3 wires

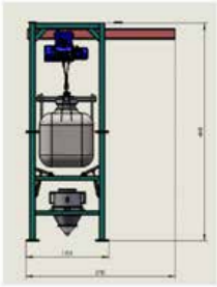

Pack n Tec

3951 Development Dr.,STE5,
Sacramento, CA 95838
Email: info@packntec.com
Website: www.packntec.com
Toll Free: (888) 232-8566

Multi-head Filling System

PLC Touchscreen control
Material: food grade stainless steel
Speed: 16-80 bottles/minute
Filling range: 1 - 33.81 oz (max 1000 ml)
Piston filling, variance +/-1%
Pneumatic requirement: 80 psi/4scfm
Conveyor width: 4.48”, length: 78.74”
Power: 220v/3phase/4wires/60hz
Dimension: LxWxH=118.11”x34.25”x74.80”
Heated hopper
Integrated with any filling line or capping machine
Optional: capping machine
label applicator
heat sleeve shrink tunnel
case packer

Pack n Tec

3951 Development Dr.,STE5,
Sacramento, CA 95838
Email: info@packntec.com
Website: www.packntec.com
Toll Free: (888) 232-8566

Net Bagging System

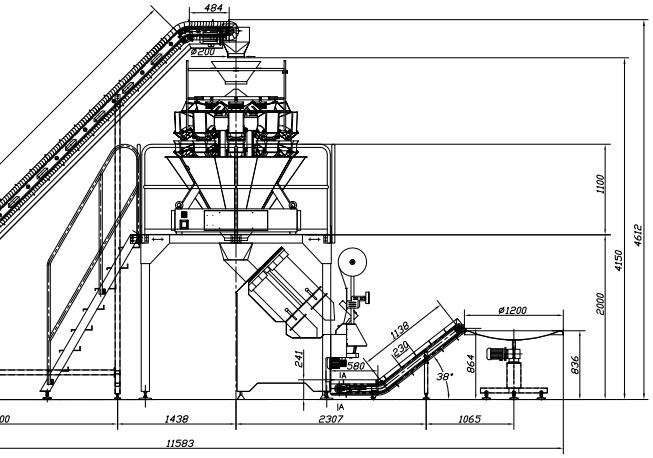

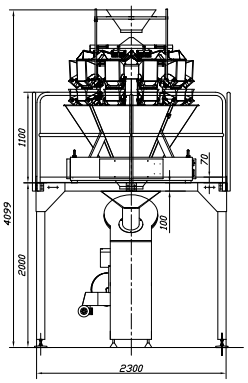

Net Bagger

Touchscreen control
Material: stainless steel chute and steel frame
Speed: 5-25 bags/minute
Weight range: 1.10 - 11 lbs

Optional:
- Mesh bag feeder
- Printed label
- Metal clippers
- Out-feed conveyor
- Lazy-susan table
- Linear combination weighing system
- In-feed Z type bucket elevation conveyor

Pack n Tec

PALLET WRAPPER SOLUTION

3951 Development Dr.,STE5,
Sacramento, CA 95838
Email: info@packntec.com
Website: www.packntec.com
Toll Free: (888) 232-8566

Automated
Pallet Wrapper

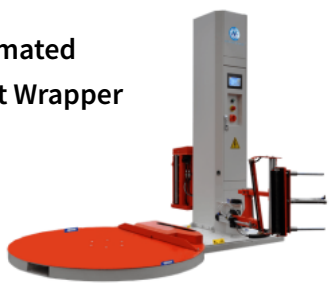

Semi-automated
Pallet Wrapper

Speed: 20-40 pallets/hour

Semi-auto and Automated Pallet

- Wraps pallet loads (43" x 43" x 82.67" H max.) weighing up to 3,300 pounds
- Variable turntable speed: maximum 12 RPM, 65 inch turntable
- Adjustable Top and Bottom wrap count (1-9)
- Variable speed carriage to apply more or less stretch film
- Forklift portable design for easy machine transport
- PLC touchscreen control panel with multi-language display
- 250% film prestretch to reduce film cost and increase film strength
- Load height sensing ultrasound stops carriage at top of each load
- Rugged steel construction for long-term reliability
- 12-Point roller cam turntable support for reliable operation
- Automated film cut-off
- Heavy-duty industrial chain drives turntable rotation
- Dual chain film carriage drive enclosed inside mast
- Home position alignment stops turntable is same position each cycle
- Powered prestretch film carriage is easy to load
- Auto jog controls for turntable, film carriage
- Power: 220v/3phase/60HZ

Pack n Tec

SOLUTION FOR LABEL APPLICATOR

3951 Development Dr.,STE5,
Sacramento, CA 95838
Email: info@packntec.com
Website: www.packntec.com
Toll Free: (888) 232-8566

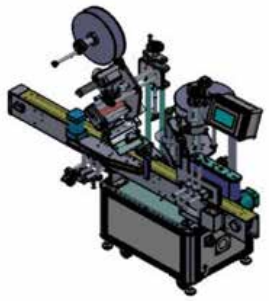

PLC Touchscreen control
Material: stainless steel and aluminum
Speed: 1500-3000 jars/bottles subject to label size and bottle/jars size
Pneumatic requirement: 0.4-0.6Mpa
Power: 220v/single phase/60hz
Application in all kinds of bottles, trays, any shape, round/hex jars, lid seal, etc.
Bottle/jar diameter range: 1.18”-3.93” (30-100mm)
Label size range: length=1.18”-11.81”
width=0.39”-6.29”
Label roll spec: ID 3”, OD 13”
Two label applicator heads (one for body and one for lid)

Pack n Tec

Solution for sachet/stick wrapper

3951 Development Dr.,STE5,
Sacramento, CA 95838
Email: info@packntec.com
Website: www.packntec.com
Toll Free: (888) 232-8566

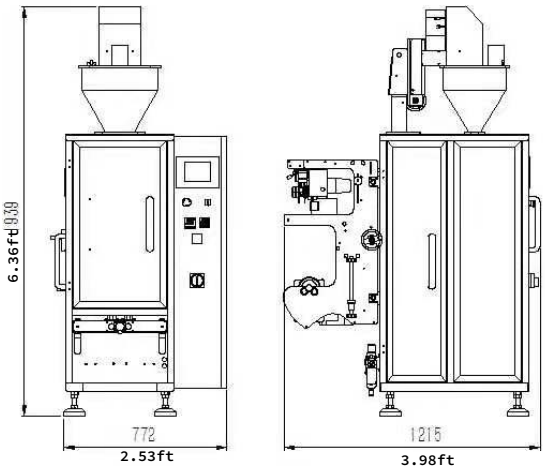

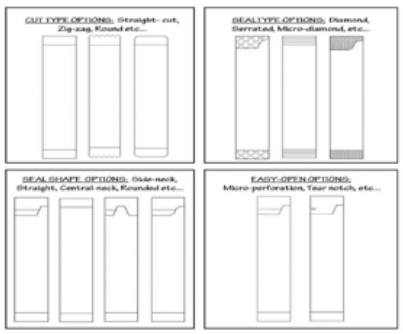

PLC Touchscreen control
Material: food grade stainless steel
Single or multi-lane VFFS
Speed: 40-60 bags/minute or more based on multi-lane design
Filling range: 0.35 - 1.76 oz (max 50 ml)
0.01 - 0.35 oz (max 10 ml)
1.76 - 10.58 oz (max 300 ml)
or any custom volume
Piston filling or volume metric filling
Pneumatic requirement: 80 psi/4scfm
Pouch width: 5 - 100mm or custom size
Pouch length: 40 - 150mm or custom size
Power: 220v/single phase/60hz
Dimension: LxWxH=29.52”x27.55”x66.92”
Date coding is included
Empty hopper alarm
Rollstock film material: any laminated poly film

Pack n Tec

Solution for bucket elevation

3951 Development Dr.,STE5,
Sacramento, CA 95838
Email: info@packntec.com
Website: www.packntec.com
Toll Free: (888) 232-8566

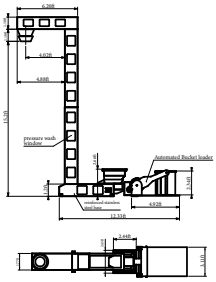

Custom design with automated brute bucket loader
Material: stainless steel
Pressure wash safe
Motor: stainless steel cased
Chain material: stainless steel
Bucket: food grade polypropylene or stainless
Foot level mount
Power: 220v/3phase, 4wires/60hz
Easy assembly design

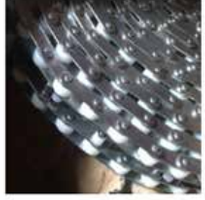

Pack n Tec

Solution for rotary/VFFS bagger

3951 Development Dr.,STE5,
Sacramento, CA 95838
Email: info@packntec.com
Website: www.packntec.com
Toll Free: (888) 232-8566

Bagger solution
Material: stainless steel
speed: 40-50 bags/minute
VFFS/flow wrapper/rotary
Integrated with linear or multi-head scale
flexible bag or tray bagging solution
date coding
Foot level mount
Power: 220v/3phase/60hz

Pack n Tec

BOV Inserter and Filling Solution

3951 Development Dr.,STE5,
Sacramento, CA 95838

Website: www.packntec.com
Toll Free: 888-232-8566

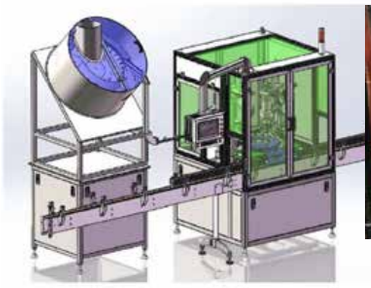

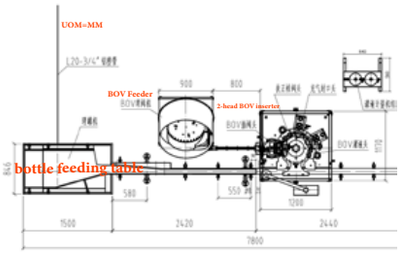

Material: stainless steel
Speed: 30-40bottles/minute
60 bottles/minute
Safety cover
Pneumatic requirements: 0.6-0.8MPa
Can/bottle ID: over 35mm
Can/bottle height range: 90-300mm
Integrated with the current filling line
Power: 220/3 phase/60hz, 3 wires
Optional: Filling
Nitrogen/air
Actuators
Checkweigher

Pack n Tec

Solution for depalletizer

3951 Development Dr.,STE5,
Sacramento, CA 95838
Email: info@packntec.com
Website: www.packntec.com
Toll Free: (888) 232-8566

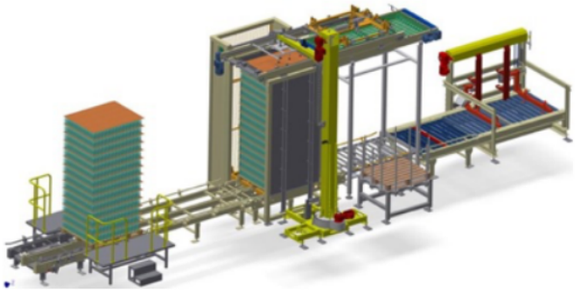

PLC Touchscreen control
Material: stainless steel and carbon steel
Speed: 6,000-15,000 cans/jars/bottles per hour
Pneumatic requirement: 0.6-0.8Mpa
Power: 220v/three phase/60hz
Application in all kinds of bottles, cans, jars
Integrated with any current filling line
Designed to feed the multiple filling lines
Auto-removal of pallet cardboard layer
Pallet dispenser

Pack n Tec®

ROBOTIC PALLETIZING EQUIPMENT
VERTICAL CONVEYOR SYSTEM
METAL DETECTOR AND CHECK WEIGHER
CONVEYORS
ULTRASONIC CLEANING TANKS
HEAT SLEEVE SHRINK TUNNEL
FILLING AND CAPPING MACHINE
PRODUCE PROCESSING EQUIPMENT
ROTARY BAGGING SYSTEM

info@packntec.com www.packntec.com